NOTRE DAME UNIVERSITY BANGLADESH

VLSI Design Lab Report-02

Course Code: CSE-4218
Course Title: VLSI Design Lab
Experiment Name: Implementing Sequential Circuit

Submitted by:

Name: Istiak Alam
ID: 0692230005101005
Batch: CSE-20

Submission Date: January 29, 2026

Submitted to:

Nfisa Tabassum,
Lecturer, Dept. of CSE
Notre Dame University Bangladesh

Table of Contents

1 Introduction **1**

2 Function 1: $(ABC + D)'$ **1**

3 Conclusion **1**

1 Introduction

The objective of this laboratory experiment is to implement given Boolean expressions using CMOS logic and verify their functional correctness through schematic design and timing simulation. The circuits were designed using the DSCH2 schematic editor, following standard CMOS pull-up and pull-down network principles. Truth tables and timing diagrams were analyzed to validate logical behavior.

2 Function 1: $(ABC + D)'$

Boolean Function

$$Y = (ABC + D)'$$

Truth Table

A	B	C	D	Y
0	0	0	0	1
0	0	1	0	1
0	1	0	0	1
0	1	1	0	1
1	1	1	0	0
X	X	X	1	0

Schematic Image

3 Conclusion

All CMOS circuits were successfully implemented and verified using DSCH2. Truth tables and timing diagrams matched theoretical expectations, confirming correct logical and temporal behavior of each function.

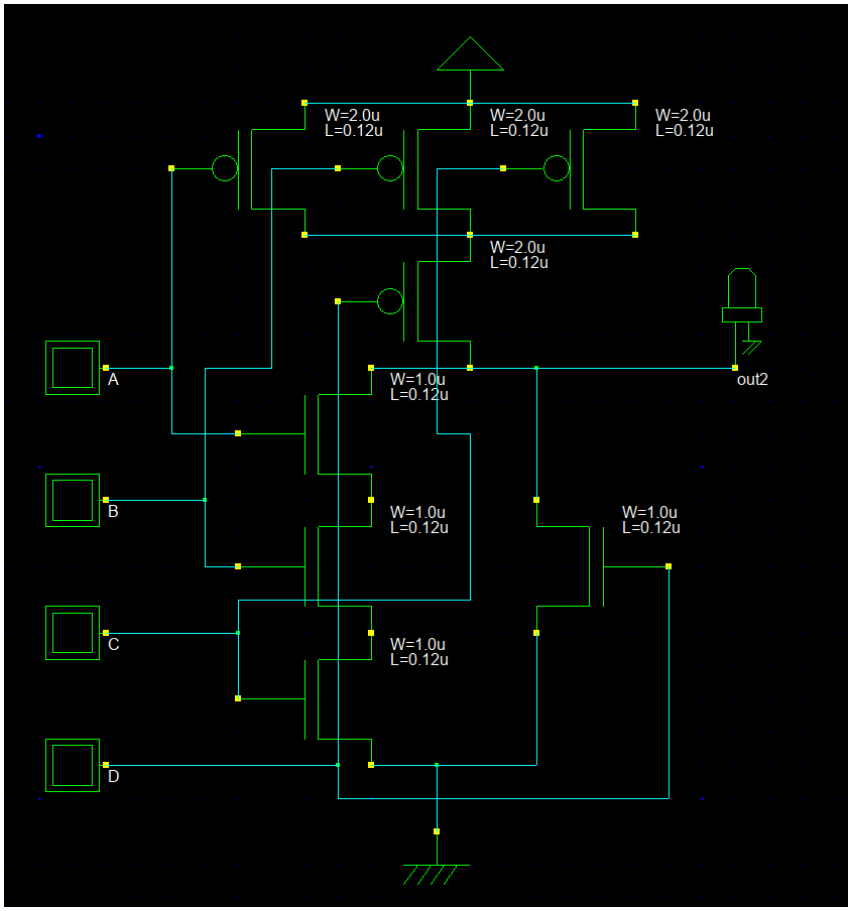

Figure 1: CMOS Schematic of $(ABC + D)'$